6 kW Off-Grid Ground-Mount Solar System - Spec Package

Turquoise Estates, Dolan Springs, Mohave County AZ (35.6 N, 114.3 W). Prepared 2026-10-20. Labels: Documented = from a cited source; Claimed = a source says so, not verified; Estimate = our number.

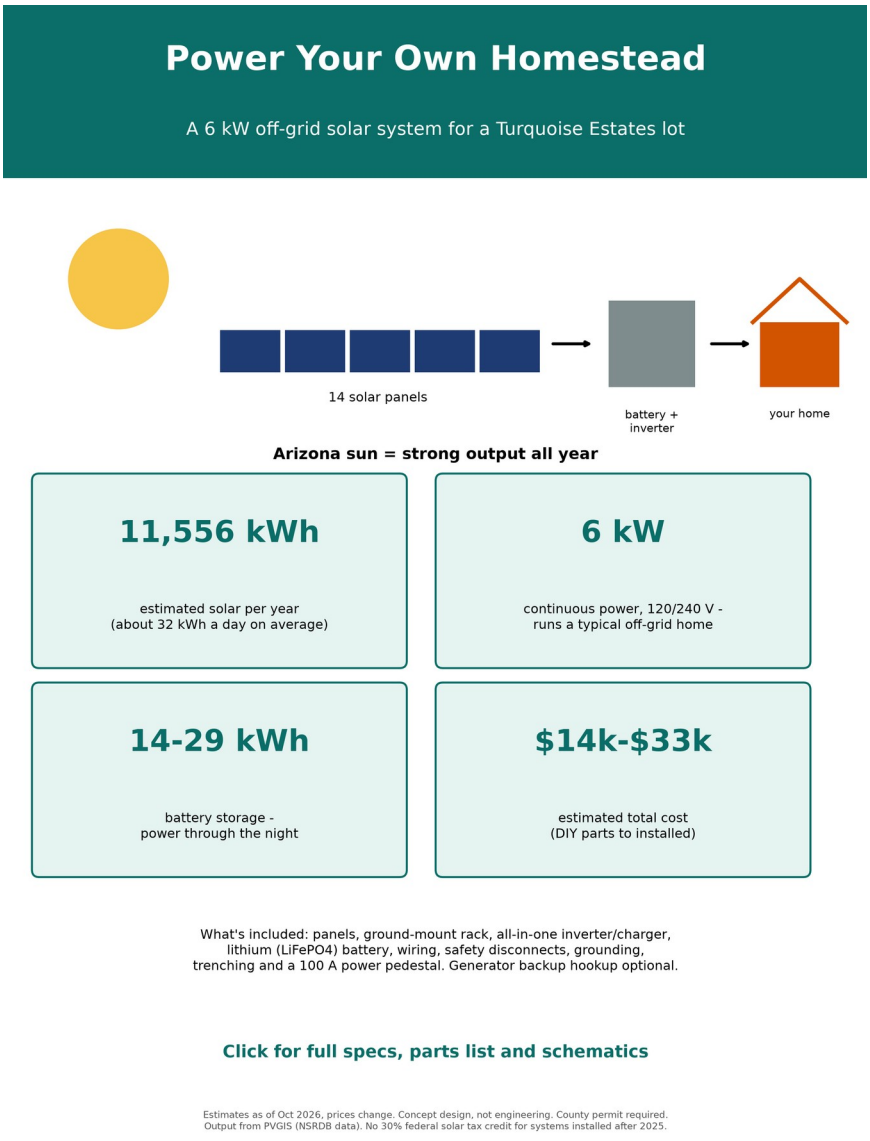

1. Key numbers

- Array: 14 x 440 W = 6.16 kW DC, 2 strings of 7, 30 deg tilt, due south.

- Annual output: about 11,556 kWh (Estimate from PVGIS-NSRDB model, 14% system losses). NREL PVWatts API was unreachable today (server error); PVGIS uses the same NREL NSRDB irradiance data.
- Total cost: $13,969 (DIY, 1 battery, DIY rack) to $32,623 (2 batteries, IronRidge, installer labor up to $8,000 est.).
- Sales tax: 5.6% (Documented: Arizona state rate; Mohave County and Dolan Springs add no local tax per Avalara/Mohave County). The 6.6-7% assumption was too high.
- Federal 30% credit (25D): NOT available. Documented: the One Big Beautiful Bill Act (P.L. 119-21) ended it for installations completed after Dec 31, 2025 (IRS FAQ).

2. Bill of materials

Item	Qty	Low $	High $	Basis / source
Solar panels: Philadelphia Solar 440 W mono bifacial (14 = 6.16 kW)	14	2,380	2,380	Documented https://www.santansolar.com/product/new-philadelphia-solar-440w-bifacial-solar-panel/
Inverter/charger: EG4 6000XP, 6 kW, 120/240 V split-phase, 48 V	1	1,500	1,500	Documented https://signaturesolar.com/eg4-6000xp-off-grid-inverter-split-phase/
Battery: EG4 WallMount Indoor 48 V 280 Ah, 14.3 kWh LiFePO4 (1 low / 2 high)	1	2,700	5,400	Documented https://signaturesolar.com/eg4-wallmount-indoor-battery-48v-280ah-14-3kwh-indoor-heated-ul1973-ul9540a-10-year-warranty
Ground mount: DIY Unistrut/Sch-40 pipe (low) or IronRidge XR1000 20-panel kit (high)	1	1,800	3,920	Low = estimate; high = documented (Sienna Solar) https://siennasolar.com/shop/20-solar-panel-ground-mounting-kit-ironridge/

Concrete footings: 12 holes 16 in dia x 5 ft (~3.1 yd3, ~140 bags 80 lb) + rebar	1	800	1,100	Estimate
PV combiner: MidNite MNPV6 + 2x 20 A DC breakers	1	124	200	Documented (box); breakers estimate https://www.solar-electric.com/mnpv6.html
PV DC disconnect, 600 V, at array/shed	1	120	200	Estimate
Battery fuse: 250 A Class T + holder; 2/0 AWG battery cables	1	250	350	Estimate
Surge protection: DC SPD (array) + AC SPD (panel)	1	150	250	Estimate
Grounding: 2x 8 ft ground rods, clamps, #6 bare Cu, lugs	1	100	160	Estimate
PV wire 10 AWG (~500 ft) + MC4 connectors	1	250	350	Estimate
AC feed to pedestal: 6 AWG Cu THWN (or 2 AWG Al) ~200 ft	1	350	600	Estimate
Conduit, fittings, pull boxes (Sch-40/80 PVC)	1	400	700	Estimate
Trenching allowance (rental trencher or contractor, ~250 ft)	1	600	1,500	Estimate
AC load center + breakers at power shed	1	200	350	Estimate
100 A service pedestal / power outlet pedestal	1	300	850	Estimate (range seen online $134-$835) https://www.ho

				medepot.com/p/Milbank-100-Amp-4-Terminal-Ringless-Horn-Bypass-Overhead-Underground-Combination-Meter-Socket-Load-Center-R5168-XTL-100-KK/202504299
Optional generator inlet, 30 A, + cord	1	120	250	Estimate
Equipment shed / weather enclosure for inverter + battery	1	800	2,500	Estimate
Materials subtotal		12,944	22,560	
Sales tax 5.6%		725	1,263	
Permit + plan fees (Estimate)		300	800	
Installer labor (optional, Estimate)		0	8,000	
TOTAL		13,969	32,623	

Prices checked Oct 18-20, 2026. Panel listing showed limited stock (24 left). Shipping/freight not included (Estimate $200-600 for a panel pallet). Rapid shutdown: NEC 690.12 applies to PV on or in buildings; a detached ground mount generally does not need it (Documented NEC rule; confirm the code edition Mohave County enforces).

3. Power calculations

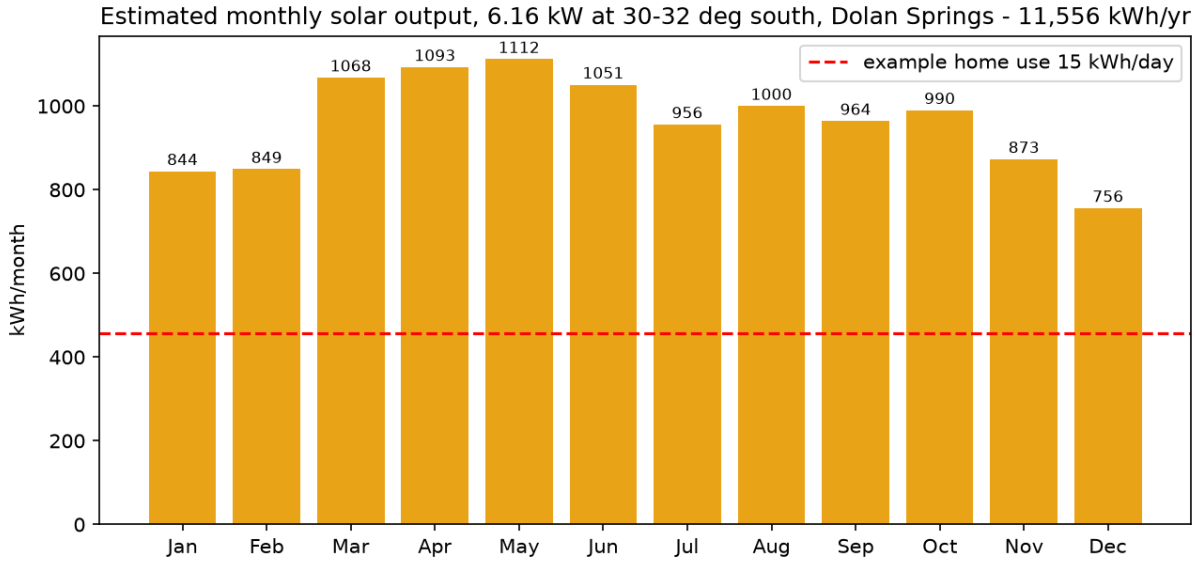

Month	kWh	kWh/day
Jan	844	27.2
Feb	849	30.3
Mar	1068	34.5
Apr	1093	36.4
May	1112	35.9
Jun	1051	35.0
Jul	956	30.8
Aug	1000	32.3
Sep	964	32.1
Oct	990	31.9
Nov	873	29.1
Dec	756	24.4
Year	11,556	

- Battery autonomy at an example 15 kWh/day load (Estimate), 90% usable: 1 battery 14.3 kWh = 0.9 days; 2 batteries 28.6 kWh = 1.7 days. Worst month (Dec) still makes about 24 kWh/day on average, but cloudy runs need the generator inlet.
- String sizing: panel Voc 38.63 V, Vmp 32.98 V, Isc 14.30 A (Documented, SanTan listing). Temp coefficient -0.27%/C Voc and -0.35%/C Vmp (Estimate, typical; confirm on datasheet). Design low -12 C / 10 F (Estimate for Dolan Springs elevation ~3,300 ft). 7 in series: cold Voc = 297 V vs 480 V inverter max (Documented, Signature Solar) - safe margin; could go to 9-10 in series. Hot Vmp (70 C cell) = 194 V, inside the MPPT window (verify the EG4 MPPT range and per-MPPT current limit on the spec sheet; bifacial gain raises Isc).
- Voltage drop, PV home run 10 AWG Cu, 150 ft one way, 13.4 A at 231 V: 2.2% (target under 3%).
- Voltage drop, AC feed 6 AWG Cu, 200 ft, 25 A at 240 V (inverter full output): 2.0%. Use 2 AWG Al or larger if you plan a second inverter.
- Battery cables: 2/0 AWG Cu, under 10 ft, 125 A max charge / ~130 A discharge at 6 kW, 250 A Class T fuse (Estimate per typical EG4 guidance).

4. One-line electrical diagram

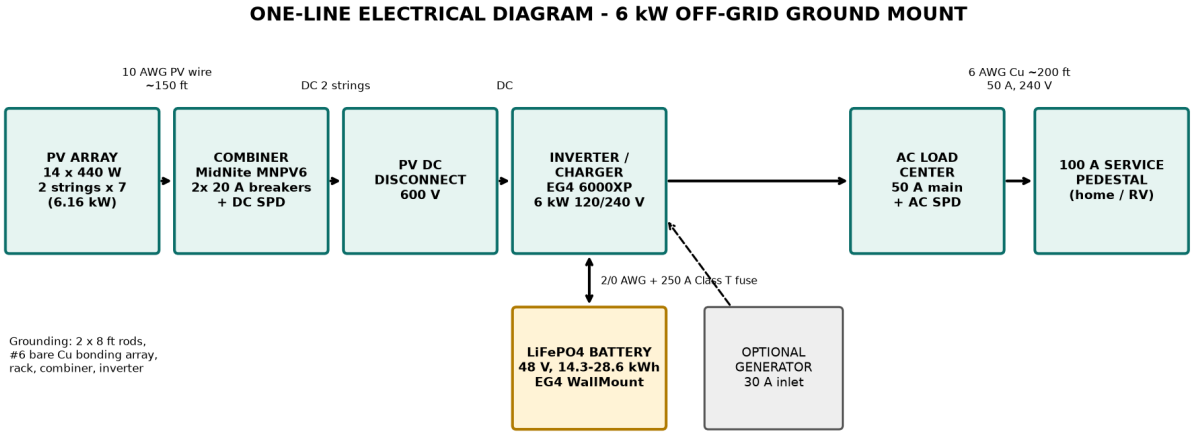

CONCEPT DRAWING - NOT STAMPED ENGINEERING. Mohave County requires a permit; verify all details with a licensed engineer/electrician.

5. Racking structural layout

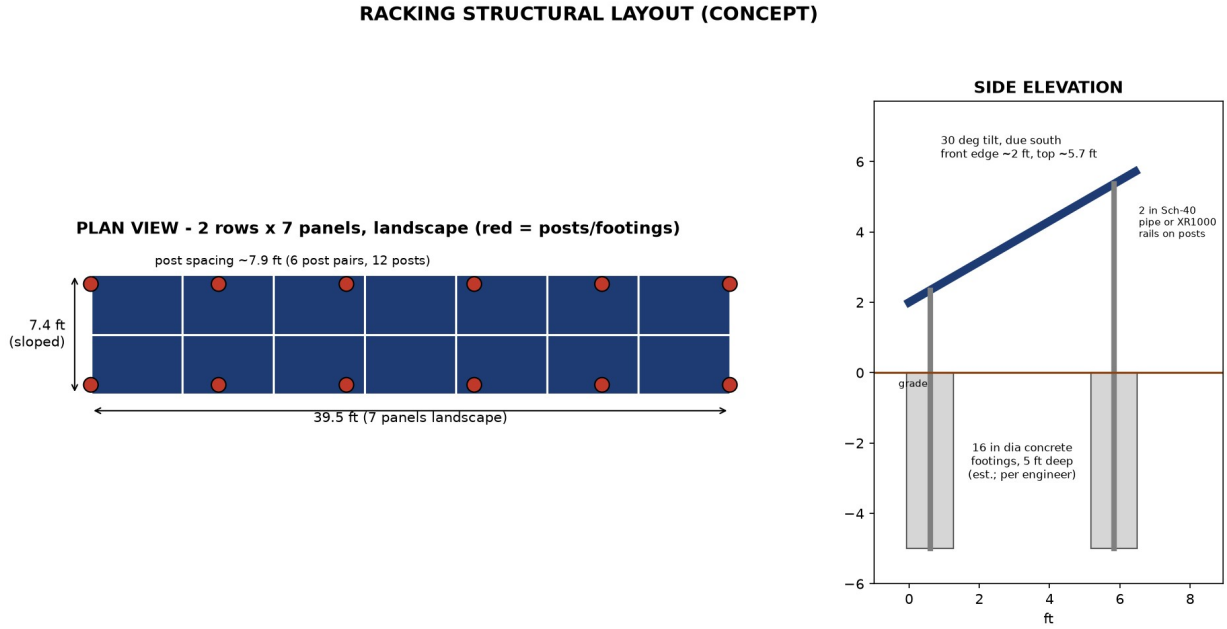

CONCEPT DRAWING - NOT STAMPED ENGINEERING. Mohave County requires a permit; verify all details with a licensed engineer/electrician.

6. Site layout sketch

SITE LAYOUT SKETCH (CONCEPT, NOT TO SURVEY)

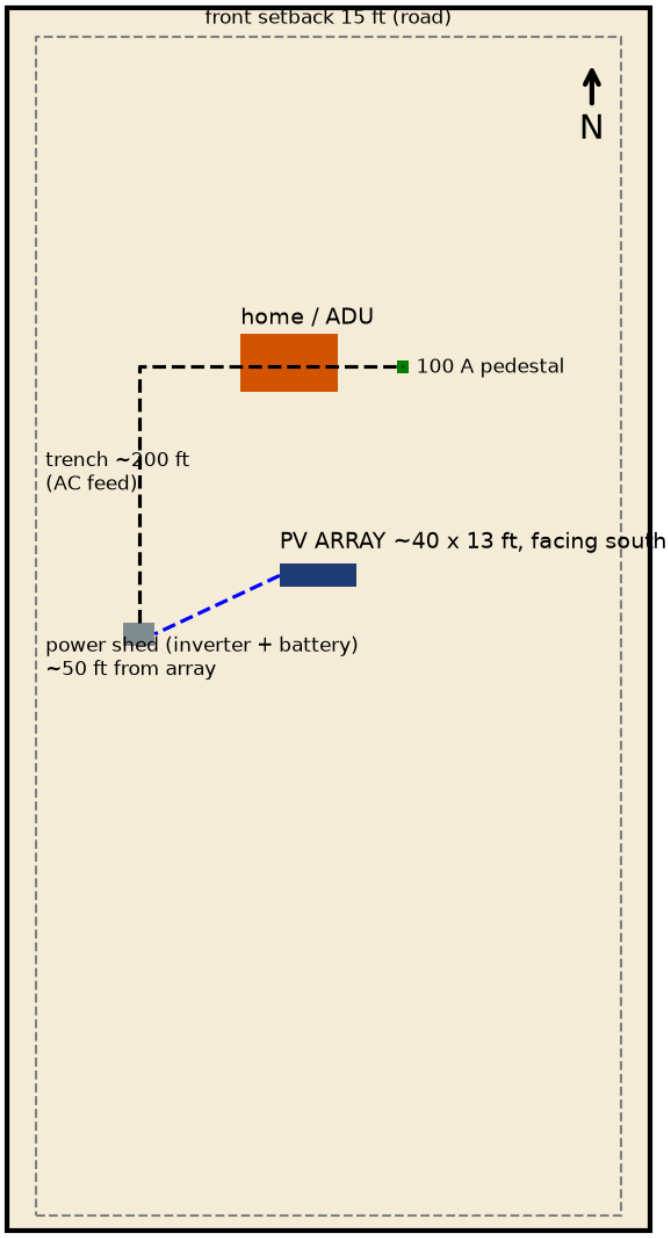

Lot approx. 330 x 627 ft (~4.75 ac) - illustrative only; keep array clear of easements and setbacks

CONCEPT DRAWING - NOT STAMPED ENGINEERING. Mohave County requires a permit; verify all details with a licensed engineer/electrician.

Footing size and depth are placeholders. A ground mount must be designed for local wind (about 110 mph class, verify) and soil; IronRidge provides engineering letters for its kits.

7. Permits

Documented: Mohave County Building Division requires a solar PV permit for residential systems, including off-grid; ground mounts need a site plan showing property lines, setbacks and easements. An electrical plan/one-line is normally part of the submittal (verify with the Building Division before buying). On Turquoise Estates lots, keep the array out of the CC&R easement strip and county setbacks.

8. Sources

- PVGIS v5.2 PVcalc, NSRDB radiation: re.jrc.ec.europa.eu
- Signature Solar EG4 6000XP and WallMount battery pages (prices seen Oct 18, 2026 via drop.solar tracker)
- SanTan Solar 440 W panel page
- Sienna Solar / SunWatts IronRidge ground-mount kits
- NAZ Solar MidNite MNPV6
- IRS OBBB FAQ on 25D; 26 U.S.C. 25D(h)
- Avalara Dolan Springs tax rate
- mohave.gov Building Division residential page